Exported on: Jan 12 2001 and is an Un-Controlled Document

0500_3164 D

ER NO.	LTR	NO.	REVISION	ZONE	DR	CHKR	APPROVED	DATE
73846	A	1	PRODUCTION_RELEASE	-	GAC	RKE	RKE	11-22-96
75718	B	1	REV PER ER	-	CSE	DG	GILLETT	11-18-97
76542	C	1	REV PER ER	-	CSE	DG	GILLETT	01-21-98

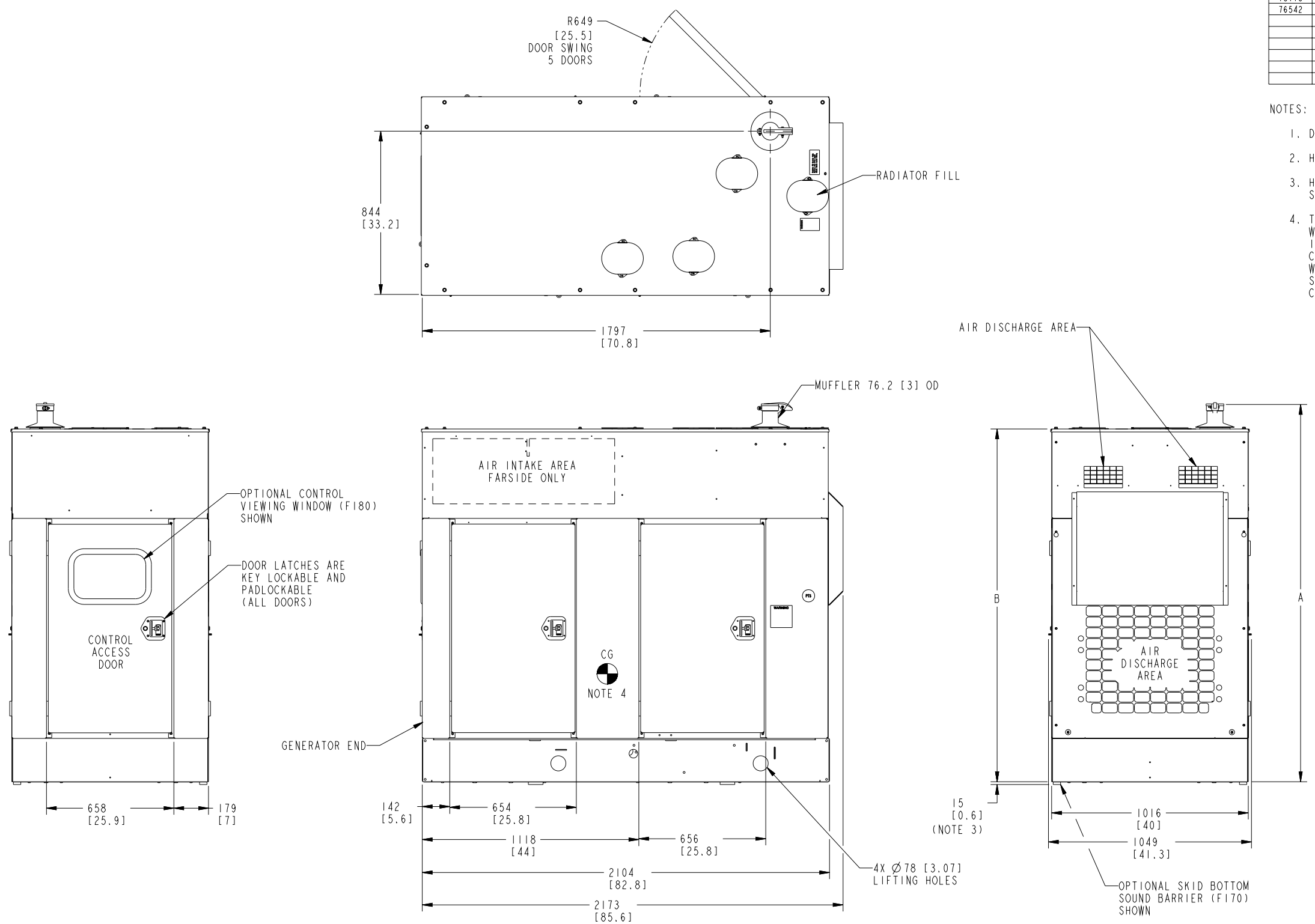

NOTES:

1. DIMENSIONS SHOWN IN [ ] ARE INCHES.
2. HOUSING AND MUFFLER WEIGHT: 339 kg (746).
3. HEIGHT INCREASE OF 14.6 [0.6] WHEN OPTIONAL SKID SOUND BARRIER IS USED.
4. THE CENTER OF GRAVITY (CG) OF THE GENERATOR SET WHEN EQUIPPED WITH THIS HOUSING SHIFTS APPROXIMATELY 32 [1.3] TOWARDS THE GENERATOR END COMPARED TO THE EQUIVALENT NON-HOUSED PRODUCT WITH THE F179 SKID.
   SEE HOUSING READY SKID BASE OUTLINE DRAWING FOR CG LOCATION OF NON-HOUSED PRODUCT.

TABULATION		
SKID BASE	DIM A	DIM B
F179 (SHOWN)	1953 [76.9]	1823 [71.8]
F176	2093 [82.4]	1963 [77.3]

CLASSIFICATION OF CHARACTERISTICS
CRITICAL ●
MAJOR ◐
MINOR (NONE)
LINE BELOW SYMBOL ● APPLIES TO UPPER LIMIT
LINE ABOVE SYMBOL ● APPLIES TO LOWER LIMIT
NO LINE WITH SYMBOL APPLIES TO BOTH LIMITS
▼KEY INSTRUCTION (NO TOLERANCE)

APPROVED R_ENGELMANN
DATE 11-22-96

METRIC DWG
Pro/ENGINEER

DO NOT SCALE PRINT

TOLERANCE UNLESS OTHERWISE SPECIFIED

	mm	inch
DIM	X ± 1 .X ± 0.8 .XX ± 0.38	.X ± .XX ± .XXX ±
HOLE	0.00-5.99 +0.15/-0.08 5.00-9.99 +0.20/-0.10 10.00-17.49 +0.25/-0.13 17.50-24.99 +0.30/-0.13	.000-.200 +.006/-.003 .201-.421 +.008/-.004 .422-.703 +.010/-.005 .704-.999 +.012/-.005

ANG TOL ± 1.0°

DRAWN TO SCALE OF 3/32

SW TO .
COPIED FROM .
THIRD ANGLE PROJECTION

THIS DOCUMENT IS THE PROPERTY OF ONAN CORPORATION. IT CONTAINS PROPRIETARY AND CONFIDENTIAL INFORMATION BELONGING TO ONAN CORPORATION. NOT TO BE COPIED OR OTHER THAN AS EXPRESSLY AUTHORIZED BY ONAN CORPORATION OR ITS REPRESENTATIVE.

ITEM	PART NO.	DWG SIZE	DESCRIPTION OR MATERIAL	REF DES

	NAME	DATE
DR	G_COLLEEN	11-22-96
CHKR ☐ MFG ☐	S_JULIK	11-22-96
APPROVED	R_ENGELMANN	11-22-96

FOR INTERPRETATION OF DIMENSIONING AND TOLERANCING, SEE ANSI Y14.5M-1982

MODEL FIRST USED ON DGBB,BC,CA,CB

Onan Minneapolis, Minnesota 55432

QUIET SITE II, FIRST STAGE

TITLE OUTLINE-ENCLOSURE (F172)

DWG NO. 0500_3164 SHEET 1 of 1 DWG SIZE D