Exported on: Jan 12 2001 and is an Un-Controlled Document

0500_3165 D

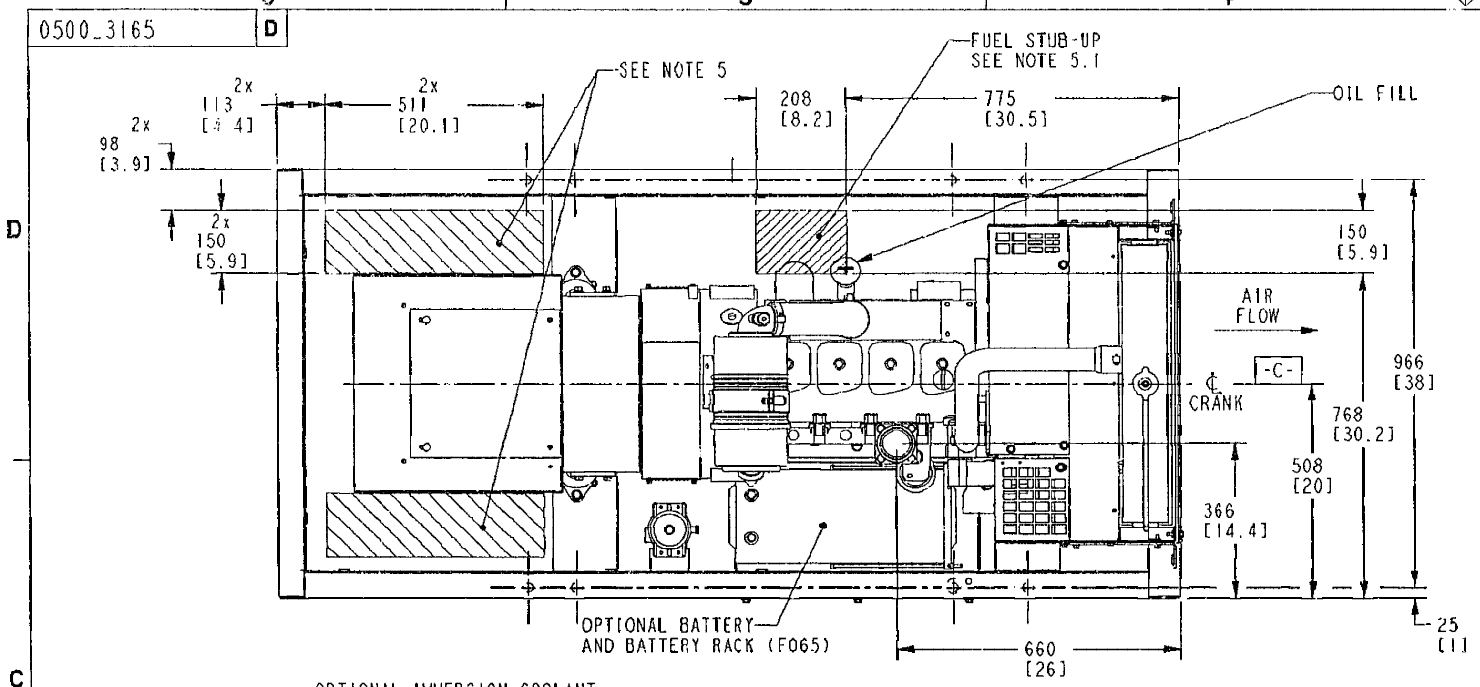

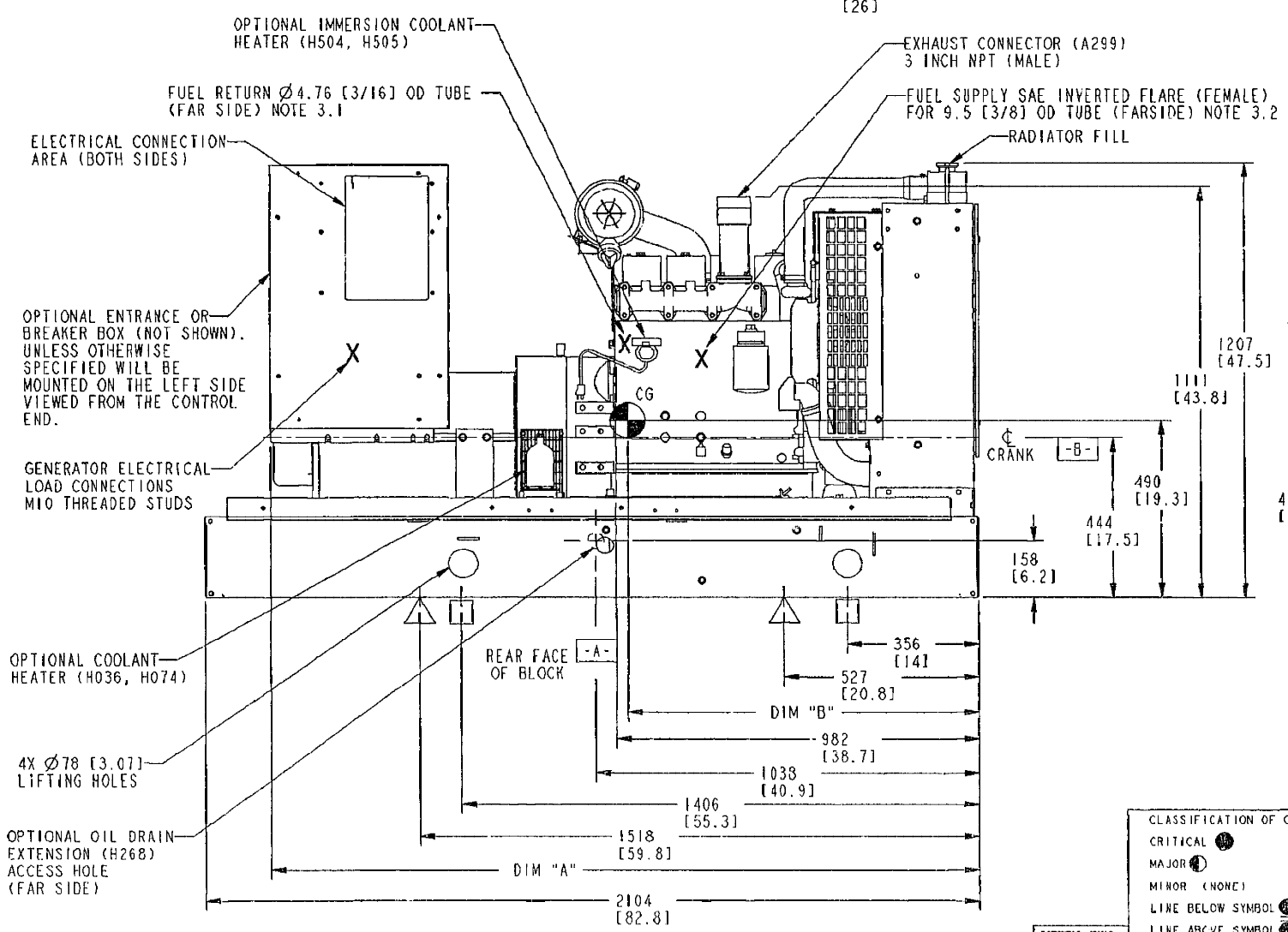

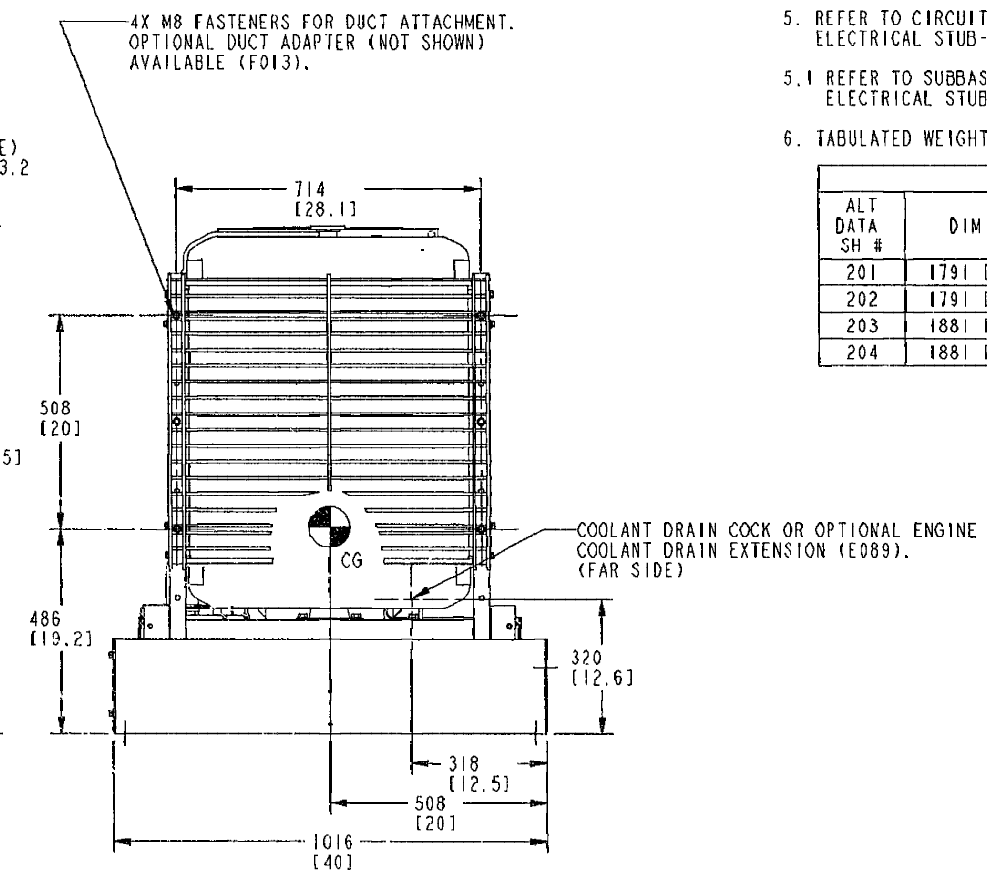

ER NO.	LTR	NO.	REVISION	ZONE	DR	CHKR	APPROVED	DATE
73846	A	1	PRODUCTION RELEASE	-	GAC	RKE	RKE	11-12-96
75718	B	1	REVISED PER ER	-	TAS	DG	GILLETT	09-26-97

NOTES:

1. DIMENSIONS SHOWN IN [ ] ARE IN INCHES.
2. Ø20.7 [.81] HOLES MARKED BY △ ARE FOR 4 POINT ISOLATION MOUNTING OR SECURING TO MOUNTING SURFACE.
3. GENSET SUPPLIED WITH FLEXIBLE FUEL LINES THAT CAN BE CONNECTED TO ENGINE INTERFACE POINTS.
3.1 FUEL RETURN LINE: 1520 [60] LONG WITH 1/8-27 NPT (MALE) TERMINATION.
3.2 FUEL SUPPLY LINE: 1020 [40] LONG WITH 1/4-18 NPT (MALE) TERMINATION.
4. Ø25.4 [1.0] HOLES MARKED □ ARE FOR SUBBASE FUEL TANK ATTACHMENT OR SECURING TO MOUNTING SURFACE.
5. REFER TO CIRCUIT BREAKER OUTLINE DRAWING FOR ELECTRICAL STUB-UP AREA FOR SPECIFIC BREAKERS.
5.1 REFER TO SUBBASE FUEL TANK OUTLINE DRAWING FOR ELECTRICAL STUB-UP AREA AVAILABLE WITH FUEL TANKS.
6. TABULATED WEIGHT AND CG IS FOR SET WITH NO OPTIONS.

TABULATION

ALT DATA SH #	DIM "A"	DIM "B"	GEN SET WET WEIGHT kg LB
201	1791 [70.5]	940 [37.0]	758 (1668)
202	1791 [70.5]	940 [37.0]	760 (1674)
203	1881 [74.1]	950 [37.4]	766 (1686)
204	1881 [74.1]	953 [37.5]	770 (1695)

CLASSIFICATION OF CHARACTERISTICS
CRITICAL
MAJOR
MINOR (NONE)
LINE BELOW SYMBOL APPLIES TO UPPER LIMIT
LINE ABOVE SYMBOL APPLIES TO LOWER LIMIT
NO LINE WITH SYMBOL APPLIES TO BOTH LIMITS
KEY INSTRUCTION (NO TOLERANCE)

APPROVED R_ENGELMANN
DATE 11-12-96

METRIC DWG
Pro/ENGINEER

DO NOT SCALE PRINT

ANG TOL± 1.0

DRAWN TO SCALE OF 1/8

TOLERANCE UNLESS OTHERWISE SPECIFIED

SUB TO
COPIED FROM
THIRD ANGLE PROJECTION

THIS DRAWING IS THE PROPERTY OF ONAN CORPORATION AND CONTAINS PROPRIETARY AND CONFIDENTIAL INFORMATION WHICH MAY NOT BE REPRODUCED, USED OR DISCLOSED OTHER THAN AS EXPRESSLY AUTHORIZED BY ONAN CORPORATION OR ITS REPRESENTATIVE

ITEM	PART NO.	DWG REV	DESCRIPTION OR MATERIAL	NO. REQ.

	NAME	DATE
DR	G_COLLEEN	11-12-96
CHKR / MFG	S_JULIK	11-12-96
APPROVED	R_ENGELMANN	11-12-96

FOR INTERPRETATION OF DIMENSIONING AND TOLERANCING, SEE ANSI Y14.5M-1982

MODEL FIRST USED ON DGBB, BC

Onan

Minneapolis, Minnesota 55432

TITLE OUTLINE-GENSET (F179)

DWG NO. 0500_3165

SHEET 1 of 1

DWG REV D

HOUSING READY SKID BASE