Exported on: Jan 12 2001 and is an Un-Controlled Document

0500_3304 D

ER NO.	LTR	NO.	REVISION	ZONE	DR	CHKR	APPROVED	DATE
FRD1038	A	1	PRODUCTION_RELEASE	-	GAC	DDG	GILLETT	07-15-99

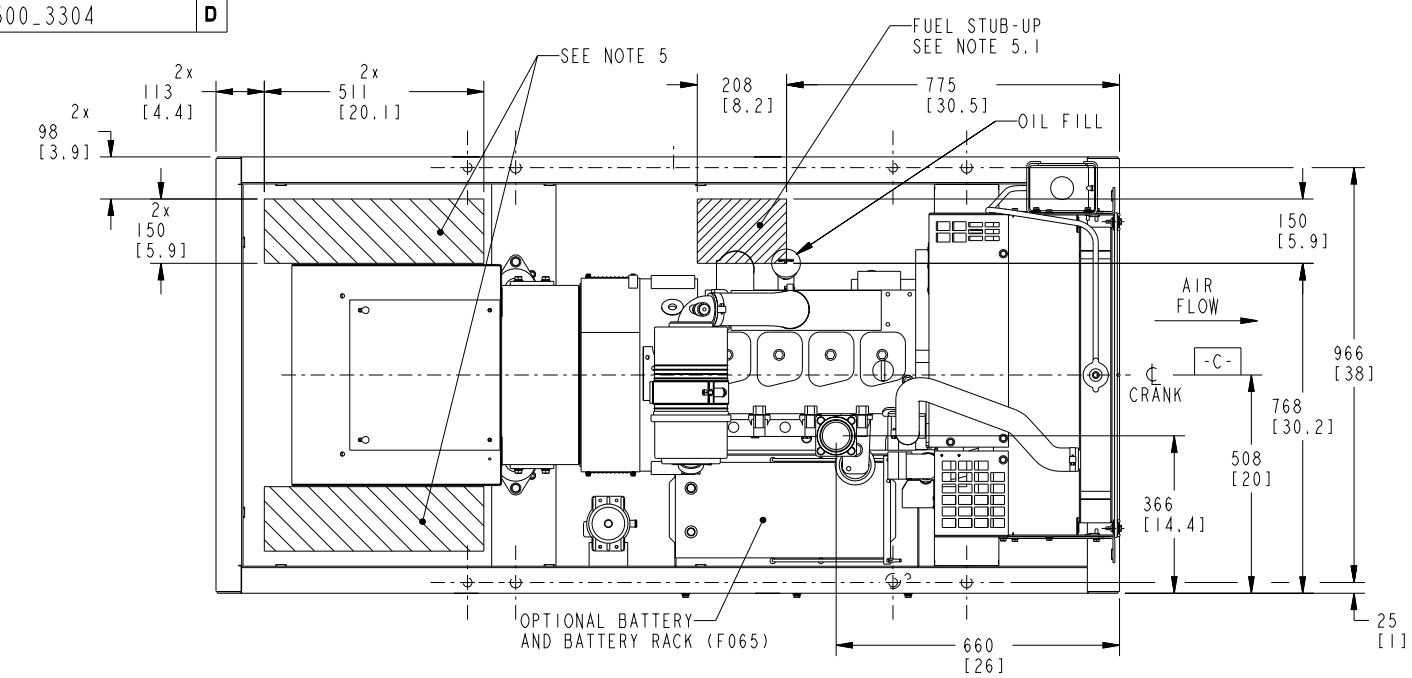

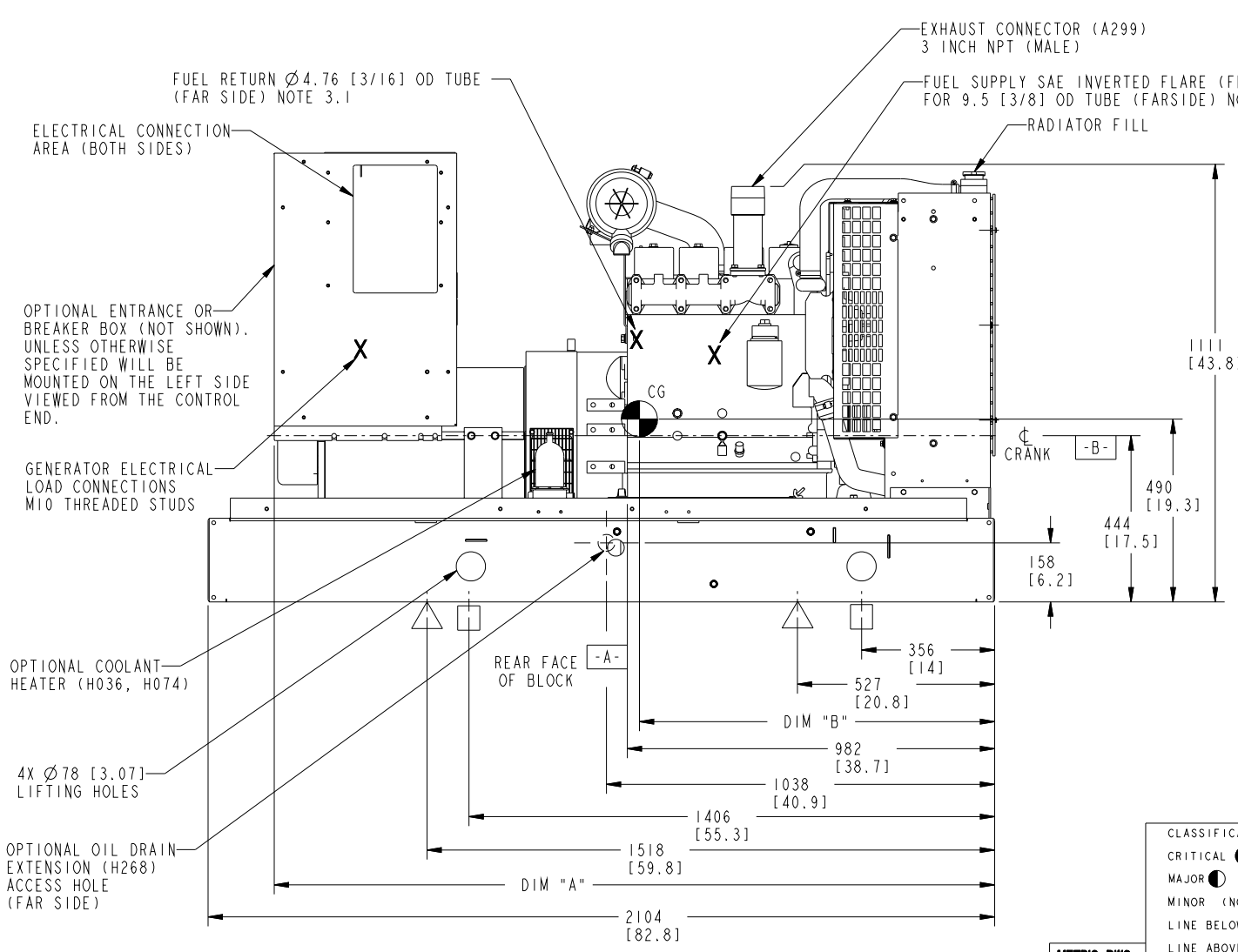

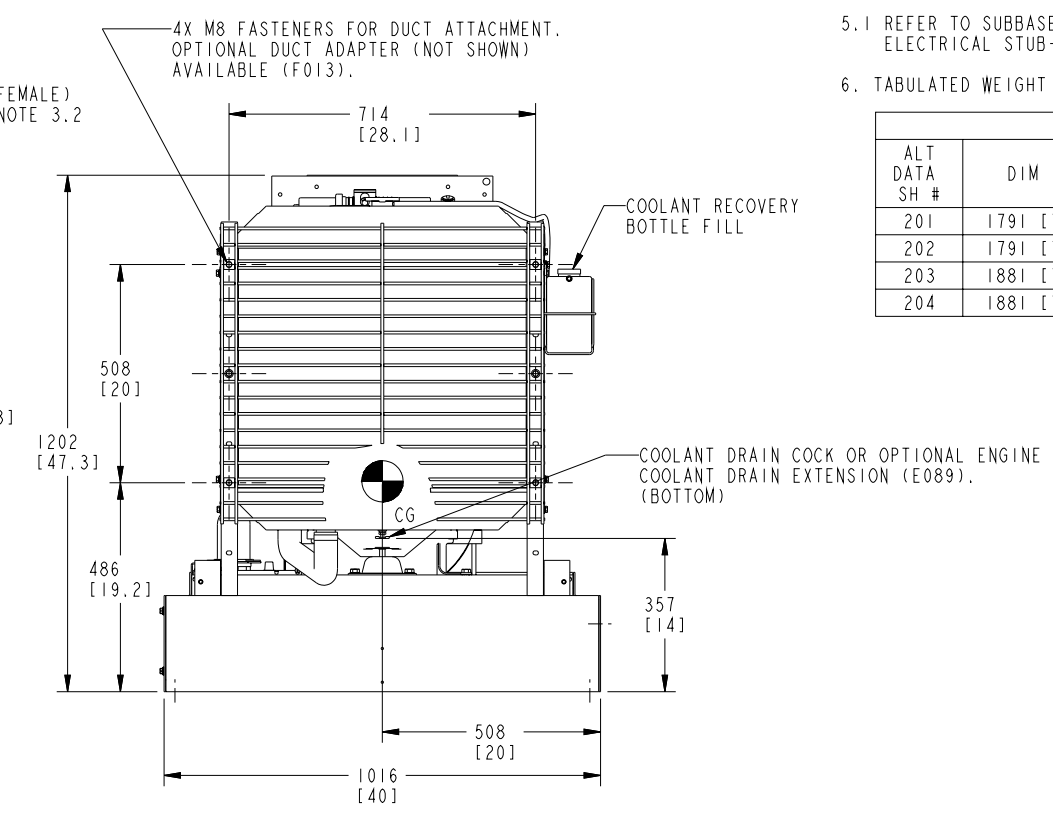

NOTES:

1. DIMENSIONS SHOWN IN [ ] ARE IN INCHES.
2. Ø20.7 [.81] HOLES MARKED BY △ ARE FOR 4 POINT ISOLATION MOUNTING OR SECURING TO MOUNTING SURFACE.
3. GENSET SUPPLIED WITH FLEXIBLE FUEL LINES THAT CAN BE CONNECTED TO ENGINE INTERFACE POINTS.
3.1 FUEL RETURN LINE: 1520 [60] LONG WITH 1/8-27 NPT (MALE) TERMINATION.
3.2 FUEL SUPPLY LINE: 1020 [40] LONG WITH 1/4-18 NPT (MALE) TERMINATION.
4. Ø25.4 [1.0] HOLES MARKED □ ARE FOR SUBBASE FUEL TANK ATTACHMENT OR SECURING TO MOUNTING SURFACE.
5. REFER TO CIRCUIT BREAKER OUTLINE DRAWING FOR ELECTRICAL STUB-UP AREA FOR SPECIFIC BREAKERS.
5.1 REFER TO SUBBASE FUEL TANK OUTLINE DRAWING FOR ELECTRICAL STUB-UP AREA AVAILABLE WITH FUEL TANKS.
6. TABULATED WEIGHT AND CG IS FOR SET WITH NO OPTIONS.

TABULATION

ALT DATA SH #	DIM "A"	DIM "B"	GEN SET WET WEIGHT kg LB
201	1791 [70.5]	940 [37.0]	758 (1668)
202	1791 [70.5]	940 [37.0]	760 (1674)
203	1881 [74.1]	950 [37.4]	766 (1686)
204	1881 [74.1]	953 [37.5]	770 (1695)

HOUSING READY SKID BASE

CLASSIFICATION OF CHARACTERISTICS
CRITICAL ●
MAJOR ◐
MINOR (NONE)
LINE BELOW SYMBOL ● APPLIES TO UPPER LIMIT
LINE ABOVE SYMBOL ● APPLIES TO LOWER LIMIT
NO LINE WITH SYMBOL APPLIES TO BOTH LIMITS
▼KEY INSTRUCTION (NO TOLERANCE)

APPROVED D_GILLETT
DATE 07-15-99

METRIC DWG
Pro/ENGINEER

DO NOT SCALE PRINT
ANG TOL± 1.0°
DRAWN TO SCALE OF 1/8

TOLERANCE UNLESS OTHERWISE SPECIFIED

DIM	mm	inch
	X ± 1	.X ±
	.X ± 0.8	.XX ±
	.XX ± 0.38	.XXX ±
HOLE	0.89- 4.99 +0.15/-0.08	.004-.200 +.006/-.003
	5.00- 9.99 +0.20/-0.10	.201-.421 +.008/-.004
	10.00-17.49 +0.25/-0.13	.422-.703 +.010/-.005
	17.50-24.99 +0.30/-0.13	.704-.999 +.012/-.005

SHIP TO .
COPIED FROM .
THIRD ANGLE PROJECTION

THIS DOCUMENT IS THE PROPERTY OF ONAN CORPORATION. IT CONTAINS PROPRIETARY AND CONFIDENTIAL INFORMATION WHICH MUST NOT BE DUPLICATED, USED OR DISCLOSED OTHER THAN AS EXPRESSLY AUTHORIZED BY ONAN CORPORATION OR ITS REPRESENTATIVE.

FOR INTERPRETATION OF DIMENSIONING AND TOLERANCING, SEE ANSI Y14.5M-1982

MODEL FIRST USED ON DGBB,BC

ITEM	PART NO.	DWG SIZE	DESCRIPTION OR MATERIAL	REF DES

	NAME	DATE
DR	G_COLLEEN	05-18-99
CHKR ☐ MFG ☐	S_JULIK	07-15-99
APPROVED	D_GILLETT	07-15-99

Minneapolis, Minnesota 55432

TITLE OUTLINE-GENSET (F179)

DWG NO. 0500_3304 SHEET 1 of 1 DWG SIZE D