Meets Tier 2 Emissions Requirements

Model DR35C4

Single or Three Phase

35KW

Electrical Ratings:

Voltage	Amperes	Cycles	Phase	KW	KVA	pf
120/240	145	60	1	35	35	1.0
120/208	121	60	3	35	43.75	0.8
120/240	105	60	3	35	43.75	0.8
277/480	52	60	3	35	43.75	0.8

Note: 50Hz Available upon request.

Standard Equipment Provided with Base Unit:

- Cummins 4 cylinder engine
- Generator with voltage regulator (1.5% voltage regulation)
- Back lit digital meter readout for engine and generator monitoring
- Trickle battery charger
- Mainline Circuit Breaker, Enclosed
- Residential Grade Exhaust
- Engine coolant tank heater or immersion heater

Options Available:

Weather Proof Enclosure
Sound Attenuated Enclosure
Fuel Tank, Double Wall, UL142 listed with level gauge and leak detection
Automatic and Manual Transfer Switches
Dual Charge Rate Battery Chargers, 6 and 10 amps
NFPA compliant Remote Display Unit and Battery Charger for Level 1 and Level 2
Heating elements
Permanent Magnet Generators and voltage regulators
Exhaust silencer upgrade to a Critical Exhaust silencer
DOT certified Trailer
Other options may be available, consult factory with your requirements

ASCO 300SE, Service Entrance Series, ATS

Ratings:

Speed (rpm)		1800	1500
Frequency (Hz)		60	50
Continuous power (hp)		39	34
Prime power (hp)		51	43
Standby Power (hp)		56	48
Estimated Fuel consumption			
100 % load	(gal/hr)	3.0	2.5
75 % load	(gal/hr)	2.1	1.9
50% load	(gal/hr)	1.6	1.3

Winpower, Inc.
Post Office Box 495
St. Peter, MN 56082
Sales (800) 327-1301
Fax (507) 357-6580

WINPOWER
A Division of DTI Dyna Technology Inc

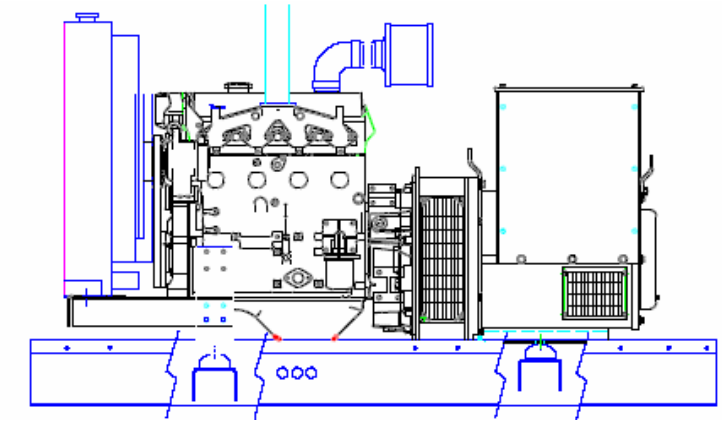

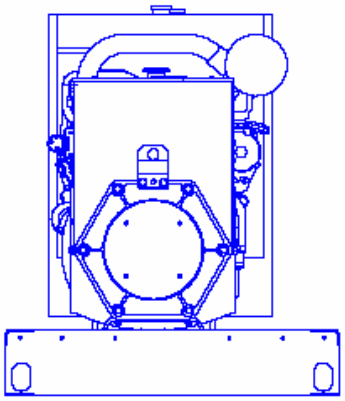

Sizes are approximate. Actual engineer drawing available with firm order

Features:

Alternator – Generator is industrial grade and meets the requirements of BS EN 60034 and the relevant section of other international standards such as BS5000, VDE 0530, NEMA MG1-32, IEC34, CSA C22.2-100, AS1359, and MIL-STDs. Single phase generator can be ordered as 4 wire dedicated or as 12 wire reconnectable to allow for future connection to different voltages. The generator rotor is dynamically balanced to better than BS6861:Part 1 Grade 2.5 for minimum vibration in operation.

Stator is wound to 2/3 pitch. This eliminates triplen harmonics on the voltage wave form and is found to be the optimum design for trouble-free supply of non-linear loads. The 2/3 pitch design avoids excessive neutral currents sometimes seen with higher winding pitches and ensures very low waveform distortion.

Standard voltage regulation is ± 1.5%. Optional Voltage Regulators and PMGs are available in a wide range to provide regulation from 1.0% to 0.5%. Additional options include but are not limited to: Air Filters, Anti-condensation Heaters, RTDs, Excitation Circuit Breaker, Remote Rheostat, RFI Suppression, Short Circuit Control and Instruction Manuals.

Control System – The DGC-500 Genset Controller provides integrated engine-generator set control, protection, and metering in a single package. Optional Remote Display Panel makes the genset fully NFPA 110 Level 1 compliant.

Control includes engine starting and shutdown as well as system monitoring and remote annunciation. DGC allows user inputs and programming to provide a reliable, customizable genset controller. This unique design has features not found in competitive models. It monitors and displays eight engine and generator parameters on the front panel and up to a total of 18 parameters via the front panel scrolling feature. The DGC-500 offers one of the most flexible designs. It has user-definable alarms, pre-alarms, timers, cranking cycles, sender inputs, J1939 Engine Communications (optional), and programmable inputs and outputs.

The DGC has an event recorder that provides a record of alarms, pre-alarms, engine starts, engine stops, engine runtime loaded, engine runtime unloaded, last run date, and many other events that are all date and time stamped to help the user determine the cause and effect of issues related to the generator set.

Engine – Cummins 4BT3.3-G1

Water cooled 4 cylinder in-line engine.

Governor:	Electronic – 0.5% speed regulation at steady state
Aspiration:	Natural
Displacement:	3.3 litre (199in3)
Battery Charging System (volts/amps):	12/63
Minimum Battery Capacity (CCA):	550
Engine Idle Speed (rpm):	750-850
Compression Ratio:	18.2:1

Winpower generators are classified based on standby use. The unit will operate at the specified power level for the duration of the commercial power outage at sea level and normal ambient temperature. Units are de-rated for output based on elevation and ambient temperature above 1000m and 40 ºC. Contact factory for percent reductions based on ambient conditions.
Important: Back feeding a utility can cause death to utility power workers. All standby units must be removed from the power grid during operation using an approved device such as a transfer switch.